REV:20240830

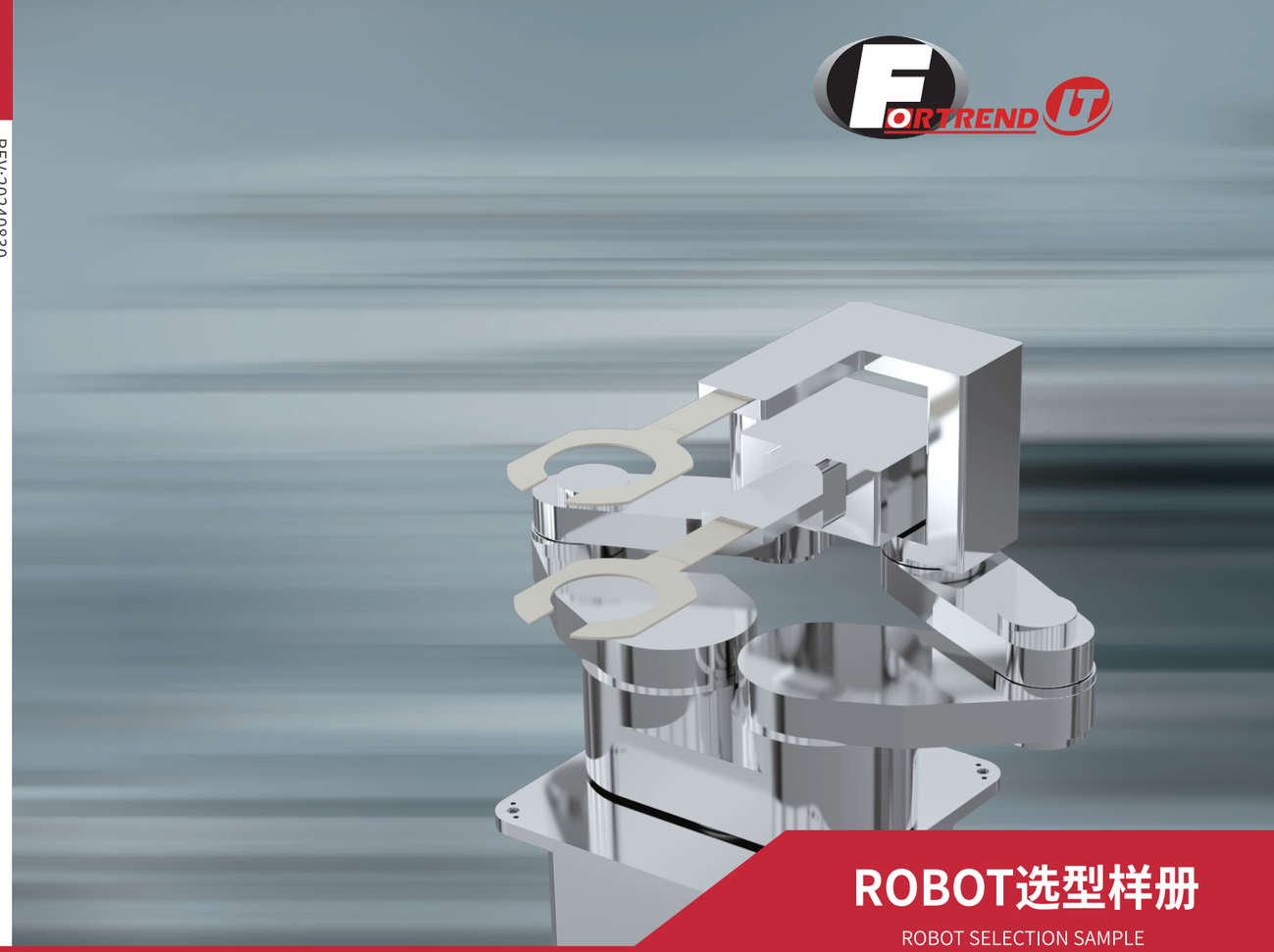

ROBOT选型样册

ROBOT SELECTION SAMPLE

(总公司)上海大族富创得科技股份有限公司

(HEAD OFFICE) SHANGHAI FORTREND TECHNOLOGY CO.,LTD

无锡富创得智能科技有限公司

Wuxi Fortrend Intelligent Technology Co.,Ltd.

电话(Tel)：021-34786180

网址(Web)：fortrendit.com

邮箱(E-mail)：liuhp775@fortrend.com.cn

地址(Add)：无锡市新吴区梅村街道梅育路100号

Address: 100 Meiyu Road, Meicun Street, Xinwu District, Wuxi City

微信公众号

官方网站

经销商
Distributors

英国 UK

Sistem Technology

Address: Grafton Suite, Caswell Science & Technology Park,
Towcester, Northants, NN12 8EQ, UK

Tel: (44) 1327 317621

韩国 South Korea

SD Solution

Address: #509,Biz-tower,63-12,Dongtancheomdansaneop 1-ro,Hwaseong-si,Gyeonggi-do,Republic of korea

Tel: (81) 42-468-4164

*本册展示产品图片为渲染图或拍摄图，技术参数及图片可能会因为改良、升级等与实际产品有所差异，仅供参考，详细信息请向您的客户经理确认，如有变动恕不另行通知。

The product pictures shown in this volume are rendered or taken. The technical parameters and pictures may be different from the actual products due to improvement and upgrade, etc., for reference only. Please confirm with your account manager for details.

无锡富创得智能科技有限公司

WUXI FORTREND INTELLIGENT TECHNOLOGY CO.,LTD

Fortrend ROBOT命名规则
MODEL DEFINITION

FWRD-Z400-R190.5-Rta-Ata-F-8-MRTX-MOD

Fortend Wafer Robot

手臂数量
Arm Qty.
S:单臂
S: Single arm
D:双臂
D: Double arm

Z:升降高度
Axis-Z Height
240mm
300mm
400mm
500mm
ZD600mm(双Z)

R:传动臂长度
Drive arm R length
146mm
190.5mm

特殊模组
Special module
Rta:单FLIP
Rta: : Single arm FLiP
Rta1:双臂上FLIP
Rta2: Double Arm Up FLIP
Rta1:双臂下FLIP
Rta2: Double Arm Down FLIP
RtaD:双臂双FLIP
RtaD: Double arm double FLip
FR:晶圆框架
无:不做选配
No options

末端执行器类型
End-effector Type
Ata:真空吸取式
Ata:Vacuum suction
Cta:末端夹持式
Cta:Edge gripper
Ber1:接触式伯努利
Ber1:Contact Bernoulli
Ber2::非接触式伯努利
Ber2:Non-Contact Bernoulli
Han:夹持托举式
Han:Clamp lift type
C*:客户定制
Customer Customization

牙叉类型
Fork Type
F: 原厂牙叉
F:Original fork
无:不做选配
No options

晶圆尺寸
Wafer size
4/6/8/12
N*:非晶圆对象
N*:Non-wafer object

选配选项
Matching Options
M1:Mapping数量1
M2:Mapping *2
M1:Mapping数量1
M2:Mapping *2
无:Mapping数量
No options

R:原厂教导器
R:Original teach pendant
无:不做选配
No options

T:原厂Track轴
T:Original Track axis
X:TRACK有效行程/mm
X:TRACK axis effective distance/mm
无:不做选配
No options

特殊非标定制
Special Customization
有:特制机型
Have: Special Model
无:量产机型
None: Normal Device

FORK系列
FORK series

真空型FORK ——Y型
Vacuum FORK -- Y type

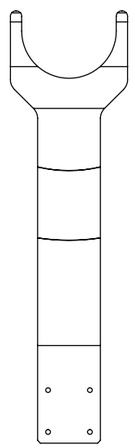

真空型FORK ——一字型
Vacuum FORK - Linear Shape

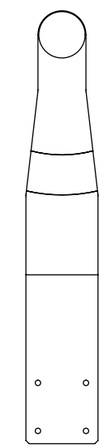

非接触式伯努利
Non-Contact Bernoulli

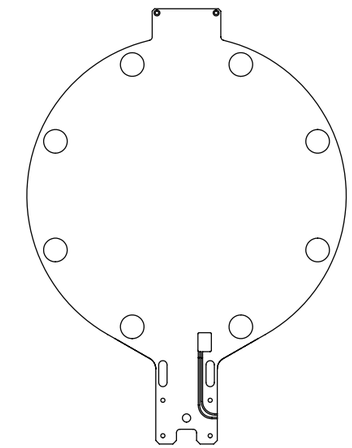

接触式伯努利
Contact Bernoulli

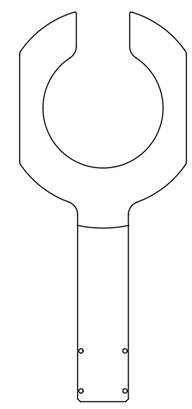

夹持型 (6/8/12选配)
Clamp type (optional on 6/8/12)

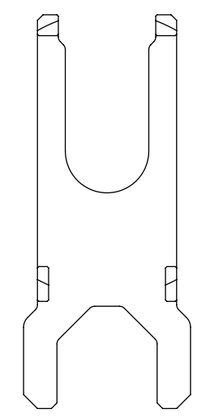

夹持型FRAME FORK
Clamp type frame fork

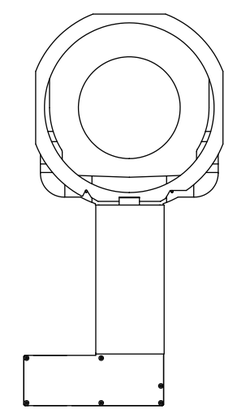

三轴机械手臂
Three -axis robot

真空型单臂机械臂
Vacuum single -arm robot

伯努利单臂机械臂
Bernoulli single -arm robot

边缘夹持型/夹持托举型机械臂
Edge gripper/clamp lifting robot

顶部固定方式 Top fixed mode
(固定沉头孔和调整螺丝依配置而定)
(Fix the counterbore and adjust the screw according to the configuration)

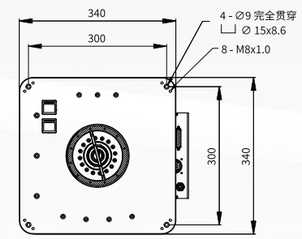

单臂机械臂运动范围示意图
Single -arm robot motion drawing

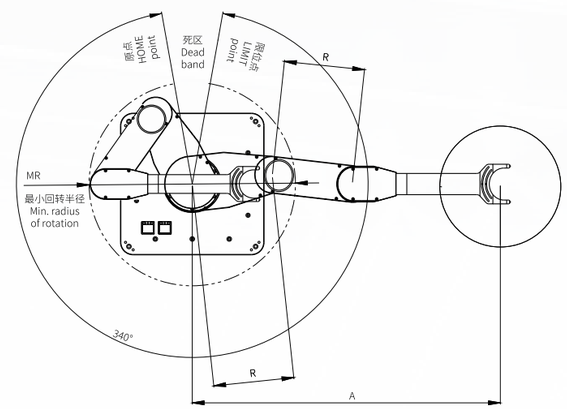

底部固定方式 Bottom fixed mode
(固定沉头孔和调整螺丝依配置而定)
(Fix the counterbore and adjust the screw according to the configuration)

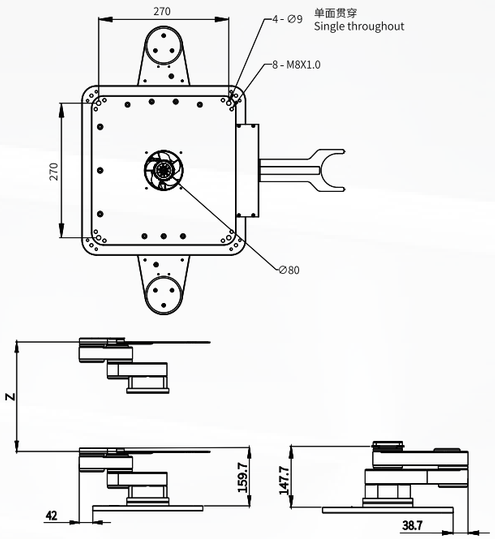

型号 Type	Z	R	MR*	A*
FWRS-	300 400 500	146 190.5	8寸540 12寸610	600 680

末端执行臂长与最小回转半径因实际选装末端效应器与传动轴不同，具体长度请以实际产品为准。
The end effector arm length and minimum turning radius are different due to the actual optional end effector and transmission shaft. Please refer to the actual product for the specific length.

型号:FWRS-3系列
Model: FWRS-3 series

本机械手为适用于洁净间的单臂机械手臂,采用避免丢步现象的闭环控制方式,采用增量式编码器的伺服电机,可对应多样化的搬运;

This is a single-arm robot suitable for clean rooms, using a closed-loop control method to avoid losing steps. Servo motors equipped with incremental encoders, capable of handling a variety of tasks.

- 采用伺服闭环控制方式;
  Using servo closed loop control methods;
- 可以在选配中选择拟似水平多关节动作对应平行配置的设备布局;
  Optional simulated horizontal multi-joint action corresponding to a parallel configuration of equipment layout;
- 可搬运重量:手臂第三关节中心处3Kg以下;
  Handling capacity: up to 3Kg at the center of the third joint of the arm;
- 可搭配不同类型的FORK,满足多样的使用工况;
  Can be matched with different types of FORKs to meet diverse working conditions;
- 可根据设备布局采用底部固定或顶部法兰固定;
  Can be fixed at the bottom or with a top flange according to the device layout;
- 晶圆固定方式:真空吸附型、伯努利型、边缘夹持型、夹持托举型。
  Wafer retention: vacuum adsorption type, Bernoulli type, Edge gripper type, clamp lifting type.
- RS232/EtherNet,直接与上位机连接与通讯
  Use RS232/EtherNet interface to directly connect and communicate with the host

三轴主要参数
Main parameters of three -axis

被搬运物 Transporter	Wafer		
运动轴 Motion axis	Z轴 Z-axis	R轴 R-axis	θ轴 θ-axis
运动范围(手臂第三轴运动中心) Range of motion(Third axis center)	300/400/500	290/378	340°
搬运速度(平均速度) Transfer (average speed)	500mm/s	800mm/s	340°/s
精度 Accuracy	0.003	0.01以下	0.003°
重复定位精度 Repeated positioning accuracy	±0.1		
厂务 Factory Service	负压：-70Kpa~-90Kpa VAC:-70Kpa~-90Kpa	正压：0.1Mpa~0.3Mpa CDA: 0.1MPa ~ 0.3MPa	电压：220-230V Voltage: 220-230V

四轴单臂机械手臂
Four-axis single-arm robot

真空吸附式FLIP单臂ROBOT
Vacuum adsorbing single arm FLIP ROBOT

接触式伯努利型FLIP单臂ROBOT
Contact Bernoulli single arm FLIP ROBOT

顶部固定方式 Top fixed mode
(固定沉头孔和调整螺丝依配置而定)
(Fix the counterbore and adjust the screw according to the configuration)

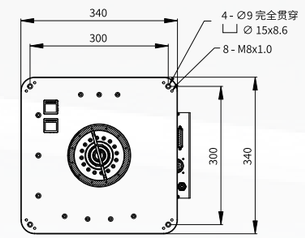

单臂机械臂运动范围示意图
Single -arm robot motion drawing

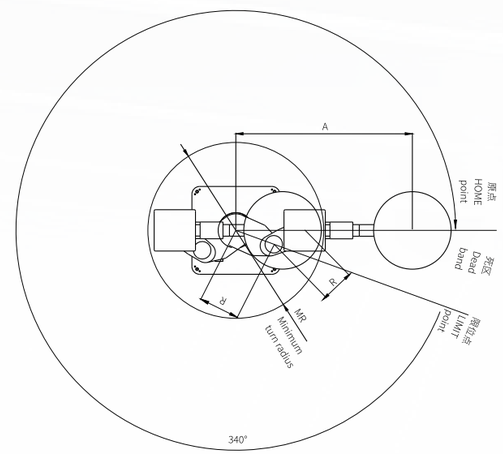

底部固定方式 Bottom fixed mode
(固定沉头孔和调整螺丝依配置而定)
(Fix the counterbore and adjust the screw according to the configuration)

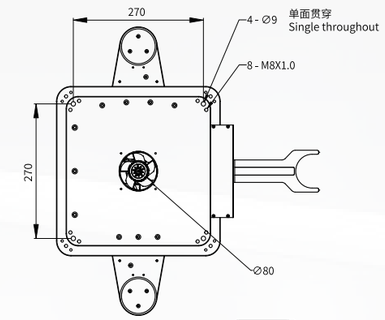

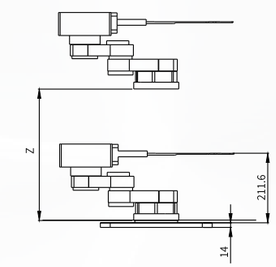

型号 Type	Z	R	MR*	A*
FWRS-	300 400 500	146 190.5	8寸660 12寸740	680 780

末端执行臂长与最小回转半径因实际选装末端效应器与传动轴不同，具体长度请以实际产品为准。
The end effector arm length and minimum turning radius are different due to the actual optional end effector and transmission shaft. Please refer to the actual product for the specific length.

型号:FWRS-4 FLIP系列
Model: FWRS-4 FLIP series

本机械手为适用于洁净间的单臂机械手臂,采用避免丢步现象的闭环控制方式,采用增量式编码器的伺服电机,可对应多样化的搬运;

This is a single-arm robot suitable for clean rooms, using a closed-loop control method to avoid losing steps. Servo motors equipped with incremental encoders, capable of handling a variety of tasks.

- ROBOT BODY采用伺服闭环控制方式;
  Robot Body uses servo closed loop control methods;
- ROBOT FLIP EEF采用步进闭环控制方式;
  Robot Flip EEF uses closed-loop stepper control methods;
- 可以在选配中选择拟似水平多关节动作对应平行配置的设备布局;
  Optional simulated horizontal multi-joint action corresponding to a parallel configuration of equipment layout;
- 可搬运重量: 手臂第三关节中心处3Kg以下;
  Handling capacity: up to 3Kg at the center of the third joint of the arm;
- 可搭配不同类型的FORK,满足多样的使用工况;
  Can be matched with different types of FORKs to meet diverse working conditions;
- 可根据设备布局采用底部固定或顶部法兰固定;
  Can be fixed at the bottom or with a top flange according to the device layout;
- 晶圆固定方式:真空吸附式、接触式伯努利型。
  Wafer retention: vacuum adsorption type,Contact Bernoulli.
- RS232/EtherNet,直接与上位机连接与通讯
  Use RS232/EtherNet interface to directly connect and communicate with the host

主要参数
The main parameters

被搬运物 Transporter	Wafer			
运动轴 Motion axis	Z轴 Z-axis	R轴 R-axis	θ轴 θ-axis	FLIP轴 FLIP-axis
运动范围(手臂第三轴运动中心) Range of motion(Third axis center)	300/400/500	290/378	340°	180°
搬运速度(平均速度) Transfer (average speed)	500mm/s	800mm/s	340°/s	1r/s
精度 Accuracy	0.003	0.01以下	0.003°	0.01°
重复定位精度 Repeated positioning accuracy	±0.1			
厂务 Factory Service	负压：-70Kpa~-90Kpa VAC:-70Kpa~-90Kpa	正压：0.1Mpa~0.3Mpa CDA: 0.1MPa ~ 0.3MPa	电压：220-230V Voltage: 220-230V	

四轴双臂机械手臂
Four-axis double arm robot

真空吸附式双臂ROBOT
Vacuum adsorbing double armROBOT

接触式伯努利型双臂ROBOT
Contact Bernoulli double arm ROBOT

边缘夹持型/夹持拖举型双臂ROBOT
Edge gripper/clamp lifting double arm ROBOT

顶部固定方式 Top fixed mode
（固定沉头孔和调整螺丝依配置而定）
(Fix the counterbore and adjust the screw according to the configuration)

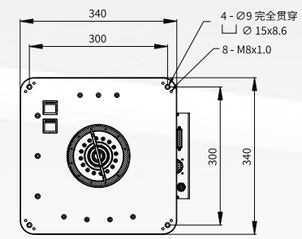

底部固定方式 Bottom fixed mode
（固定沉头孔和调整螺丝依配置而定）
(Fix the counterbore and adjust the screw according to the configuration)

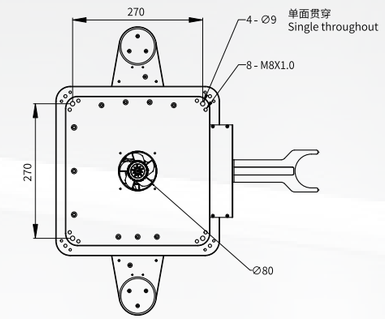

双臂ROBOT运动范围示意图
Double arm robot motion drawing

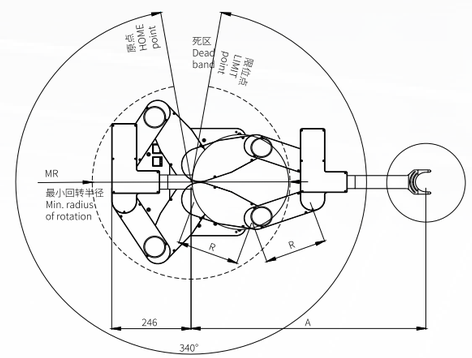

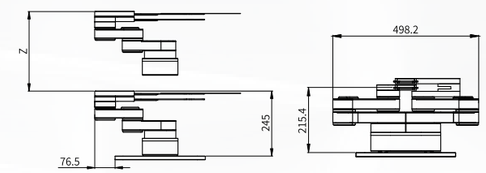

型号 Type	Z	R	MR*	A*
FWRS-	300 400 500	146 190.5	8寸550 12寸620 8寸600 12寸620	610 700

末端执行臂长与最小回转半径因实际选装末端效应器与传动轴不同，具体长度请以实际产品为准。
The end effector arm length and minimum turning radius are different due to the actual optional end effector and transmission shaft. Please refer to the actual product for the specific length.

型号：双臂机械手臂的FWRD-4 系列
Model: FWRD-4 double arm series

本机械手为适用于洁净间的双臂机械手臂的FWRD-4 系列，采用避免丢步现象的闭环控制方式，采用增量式编码器的伺服电机，可对应多样化的搬运，适用于高速搬运；

The FWRD-4 double arm series is designed for use in cleanrooms, using a closed-loop control method to avoid losing steps. Servo motors equipped with incremental encoders, capable of handling a variety of tasks in high-speed;

- ROBOT DODY/ARM轴采用伺服闭环控制方式；
  Robot Dody/ARM axis adopts servo closed loop control method；
- 可以在选配中选择拟似水平多关节动作对应平行配置的设备布局；
  Optional simulated horizontal multi-joint action corresponding to a parallel configuration of equipment layout；
- 可搬运重量：手臂第三关节中心处3Kg以下；
  Handling capacity: up to 3Kg at the center of the third joint of the arm;
- 采用双臂结构，可缩短晶圆交换时间；
  Adopting a dual-arm structure can reduce the wafer exchange time;
- 可搭配不同类型的FORK，满足多样的使用工况；
  Can be matched with different types of FORKs to meet diverse use conditions;
- 可根据设备布局采用底部固定或顶部法兰固定；
  Can be fixed at the bottom or with a top flange according to the device layout;
- 晶圆固定方式：真空吸附式、接触式伯努利型。
  Wafer retention: vacuum adsorption type,Contact Bernoulli.
- RS232/EtherNet,直接与上位机连接与通讯
  Use RS232/EtherNet interface to directly connect and communicate with the host

主要参数
The main parameters

被搬运物 Transporter	Wafer			
运动轴 Motion axis	Z轴 Z-axis	R1轴 R-axis	R2轴 R2-axis	θ轴 θ-axis
运动范围（手臂第三轴运动中心） Range of motion(Third axis center)	300/400/500	290/378	290/378	340°
搬运速度（平均速度） Transfer (average speed)	500mm/s	800mm/s	800mm/s	340°/s
精度 Accuracy	0.003	0.01以下	0.01以下	0.003°
重复定位精度 Repeated positioning accuracy	±0.1			
厂务 Factory Service	负压：-70Kpa~-90Kpa VAC:-70Kpa~-90Kpa	正压：0.1Mpa~0.3Mpa CDA: 0.1MPa ~ 0.3MPa	电压：单相220-230V Voltage: Single phase 220V 10A	

五轴双臂FLIP机械手臂
Five -axis double arm FLIP robot

真空吸附式双臂FLIP ROBOT
Vacuum adsorbing double arm FLIP ROBOT

接触式伯努利型双臂FLIP ROBOT
Contact Bernoulli double arm FLIP ROBOT

选配TRACK轴，可配合我司ROBOT适用于2-4LOADPORT传片
With the optional Track axis, it can be coordinated with Fortrend Robot to be suitable for 2-4 LOADPORT wafer transfer

地轨式示意图
Ground-rail track axis robot drawing

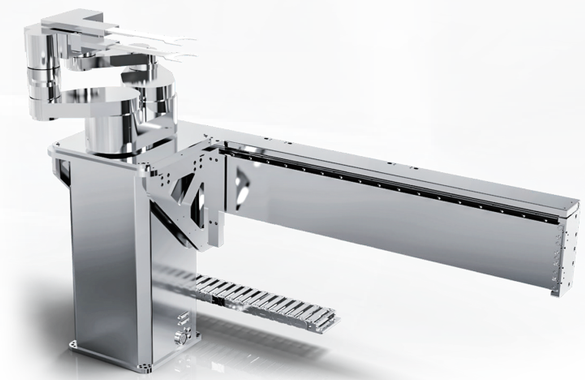

侧挂式TRACK示意图
Side-mounted track axis robot drawing

型号：双臂FLIP机械手臂的FWRD-5系列
Model: FWRD-5 double arm FLIP series

本机械手为适用于洁净间的双臂机械手臂的FWRD-5系列，采用避免丢步现象的闭环控制方式，采用增量式编码器的伺服电机，可对应多样化的搬运，适用于高速搬运；

The FWRD-5 double arm FLIP series is designed for use in cleanrooms, using a closed-loop control method to avoid losing steps. Servo motors equipped with incremental encoders, capable of handling a variety of tasks in high-speed;

- ROBOT DODY/ARM轴采用伺服闭环控制方式；
  Robot Dody/ARM axis adopts servo closed loop control method
- ROBOT FLIP EEF轴采用步进闭环控制方式；
  Robot Flip EEF uses closed loop stapper control method;
- 可以在选配中选择拟似水平多关节动作对应平行配置的设备布局；
  Optional simulated horizontal multi-joint action corresponding to a parallel configuration of equipment layout；
- 可搬运重量：手臂第三关节中心处3Kg以下；
  Handling capacity: up to 3Kg at the center of the third joint of the arm;
- 采用双臂结构，可缩短晶圆交换时间；
  Adopting a dual-arm structure can reduce the wafer exchange time;
- 可搭配不同类型的FORK，满足多样的使用工况；
  Can be matched with different types of fork to meet diverse use conditions;
- 可根据设备布局采用底部固定或顶部法兰固定；
  Can be fixed at the bottom or with a top flange according to the device layout;
- 晶圆固定方式：真空吸附式、接触式伯努利型。
  Wafer retention: vacuum adsorption type,Contact Bernoulli.
- RS232/EtherNet,直接与上位机连接与通讯
  Use RS232/EtherNet interface to directly connect and communicate with the host

主要参数
The main parameters

被搬运物 Transporter	Wafer				
运动轴 Motion axis	Z轴 Z-axis	R1轴 R-axis	R2轴 R2-axis	θ轴 θ-axis	FLIP轴 FLIP-axis
运动范围（手臂第三轴运动中心） Range of motion(Third axis center)	300/400/500	290/378	290/378	340°	180°
搬运速度（平均速度） Transfer (average speed)	500mm/s	800mm/s	800mm/s	340°/s	1r/s
精度 Accuracy	0.003	0.01以下	0.01以下	0.003°	0.01°
重复定位精度 Repeated positioning accuracy	±0 1				
厂务 Factory Service	负压：-70Kpa~-90Kpa VAC:-70Kpa~-90Kpa	正压：0.1Mpa~0.3Mpa CDA: 0.1MPa ~ 0.3MPa	电源：单相220V 10A Voltage: Single phase 220V 10A		